ECG 721 Memory Circuit Design

Oct. 5, 2015

Section 18.1

Lecture 12

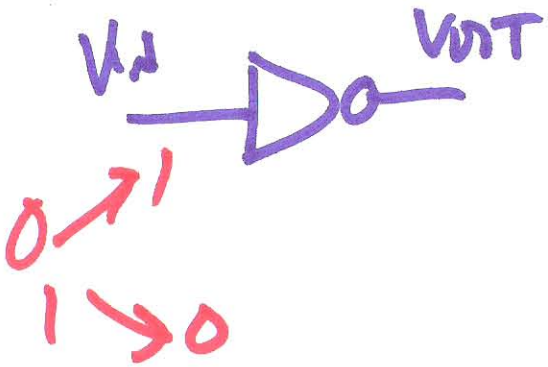

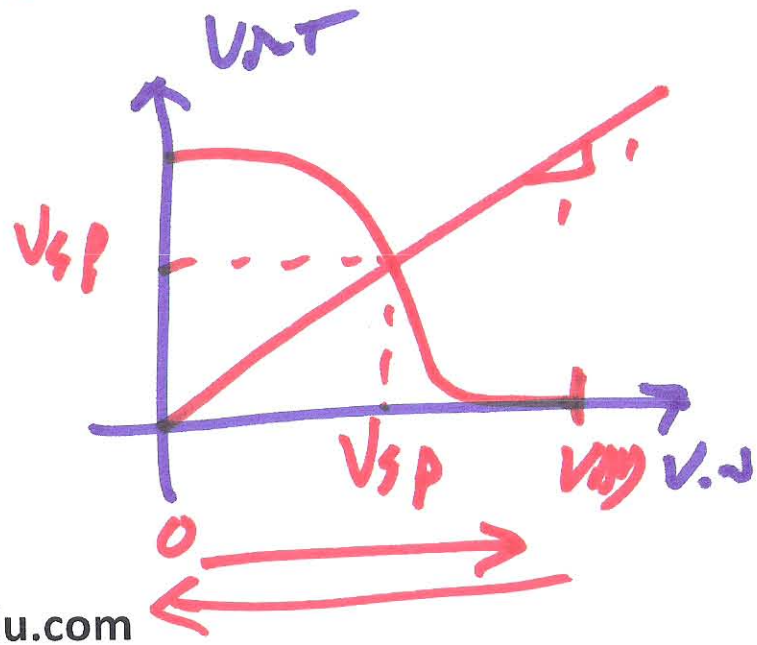

1)

Schmitt Trigger

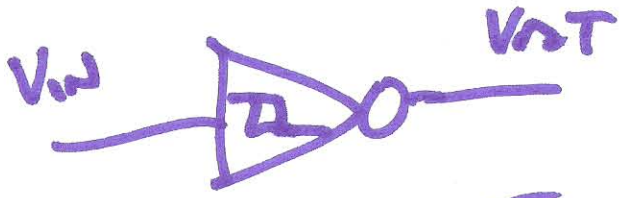

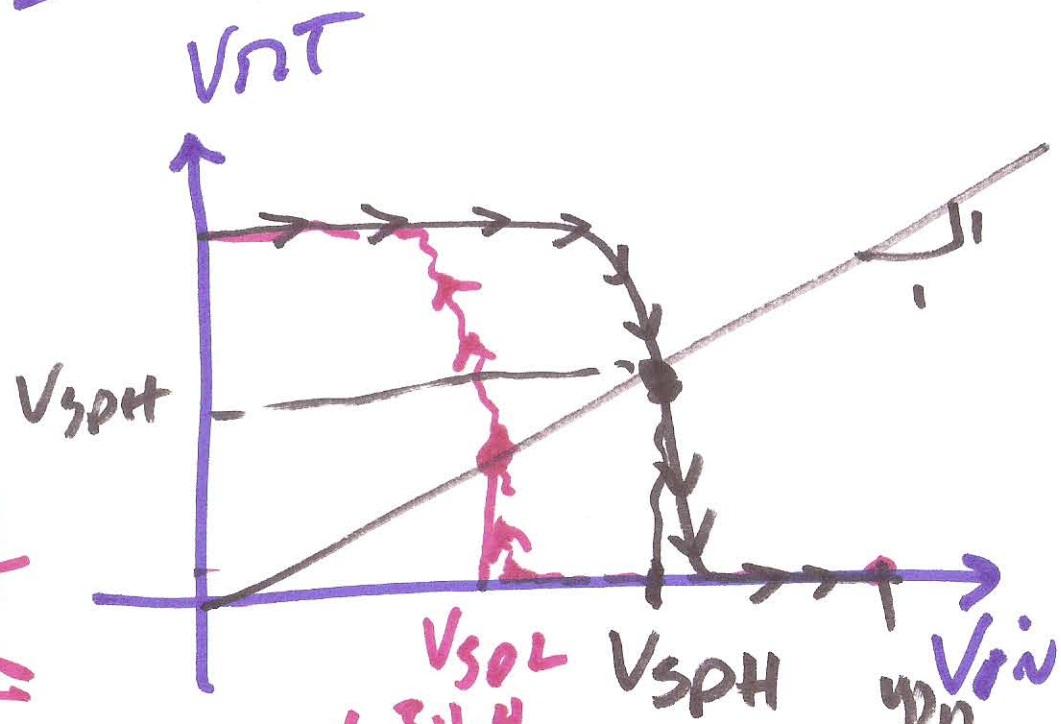

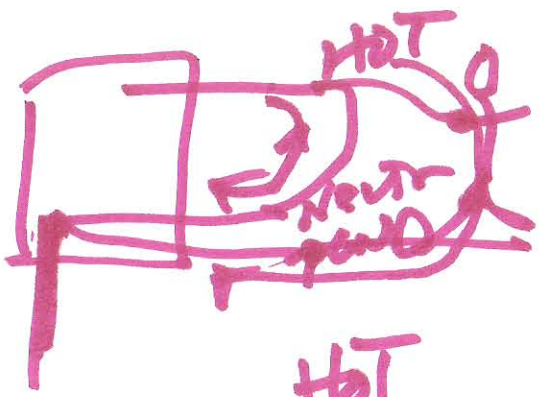

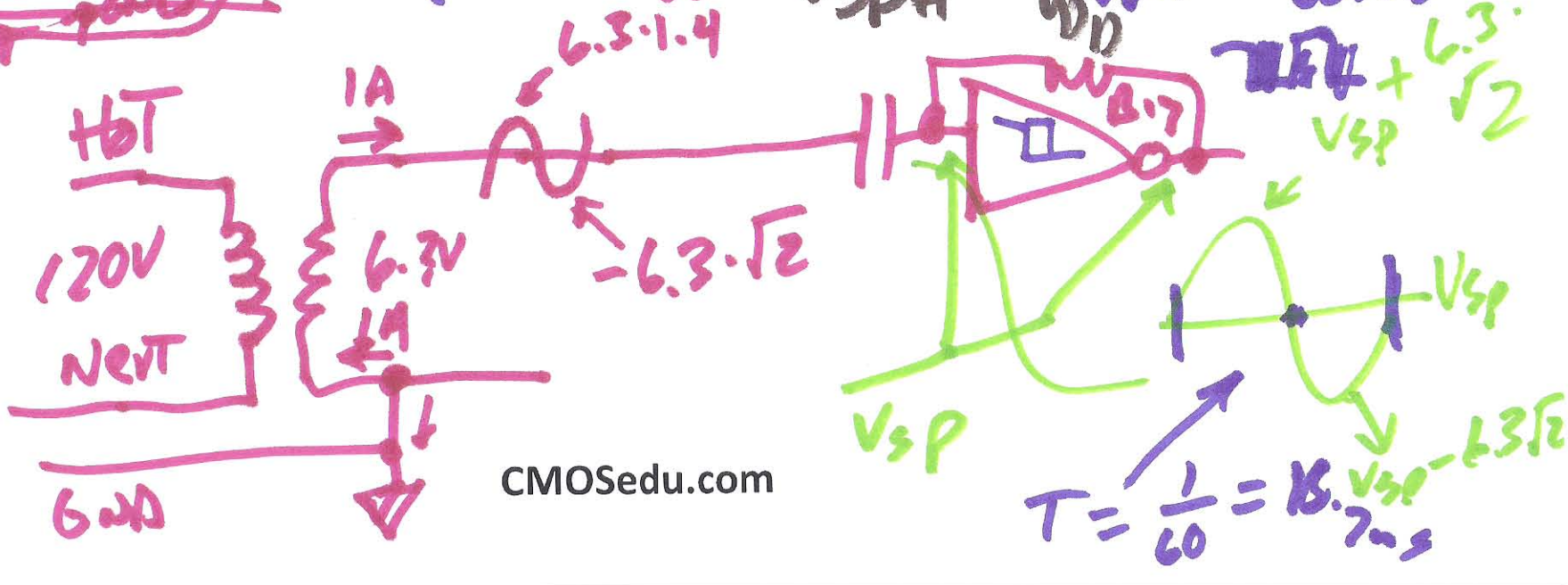

2)

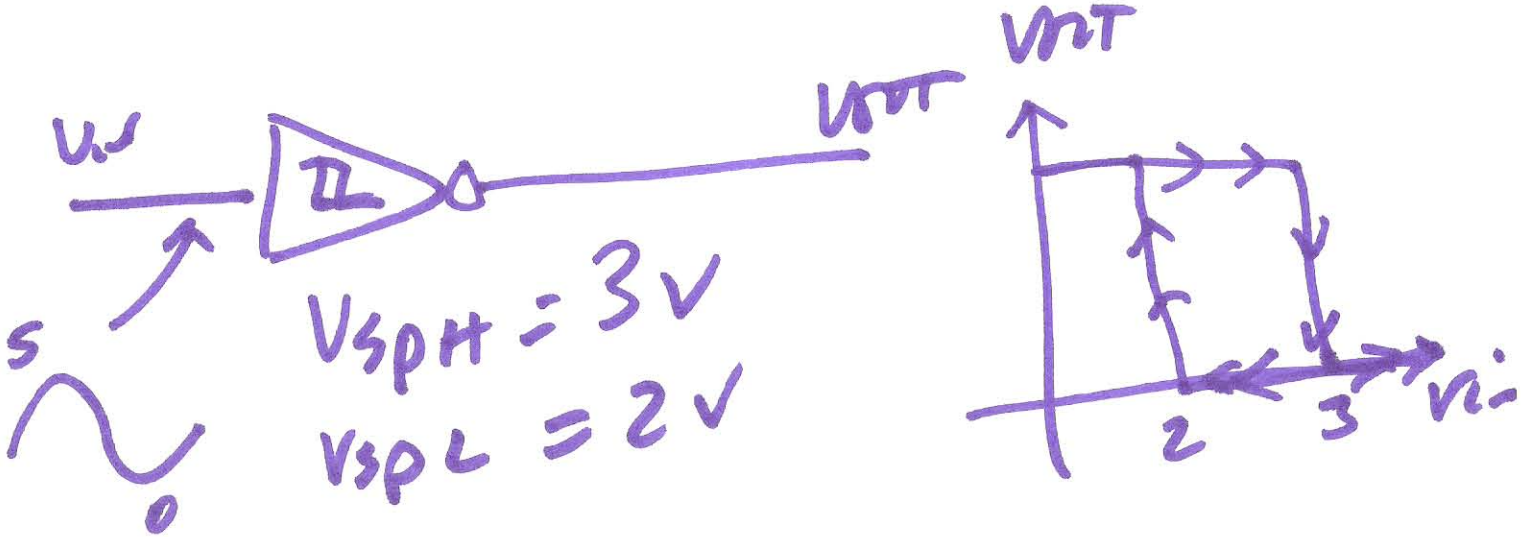

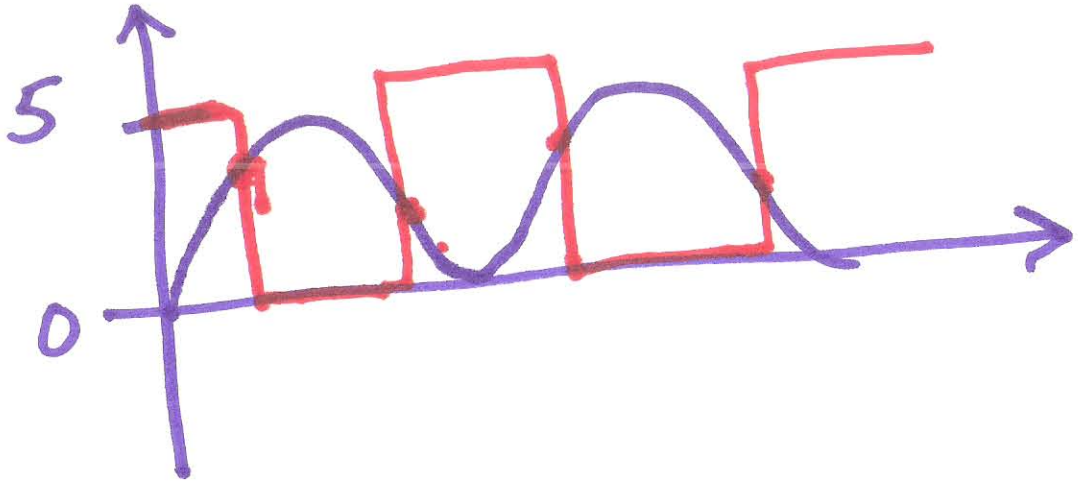

3)

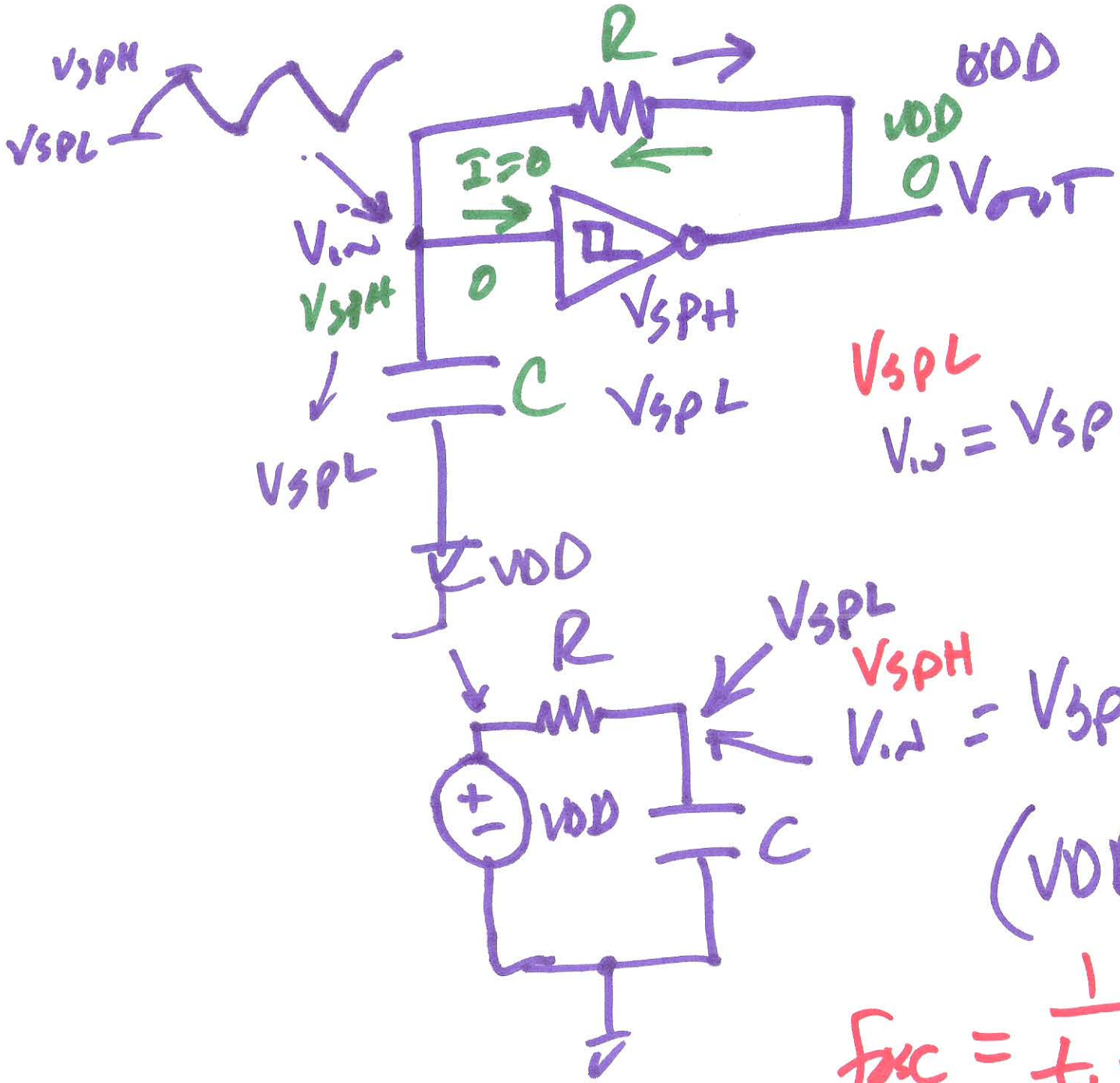

$$V_{in} = V_{SPH} + (0 - V_{SPH}) \cdot \left(1 - e^{-t/RC}\right)$$

$$V_{in} = V_{SPL} + (V_{DD} - V_{SPL})\left(1 - e^{-t/RC}\right)$$

$$f_{osc} = \frac{1}{t_1 + t_2}$$

4)

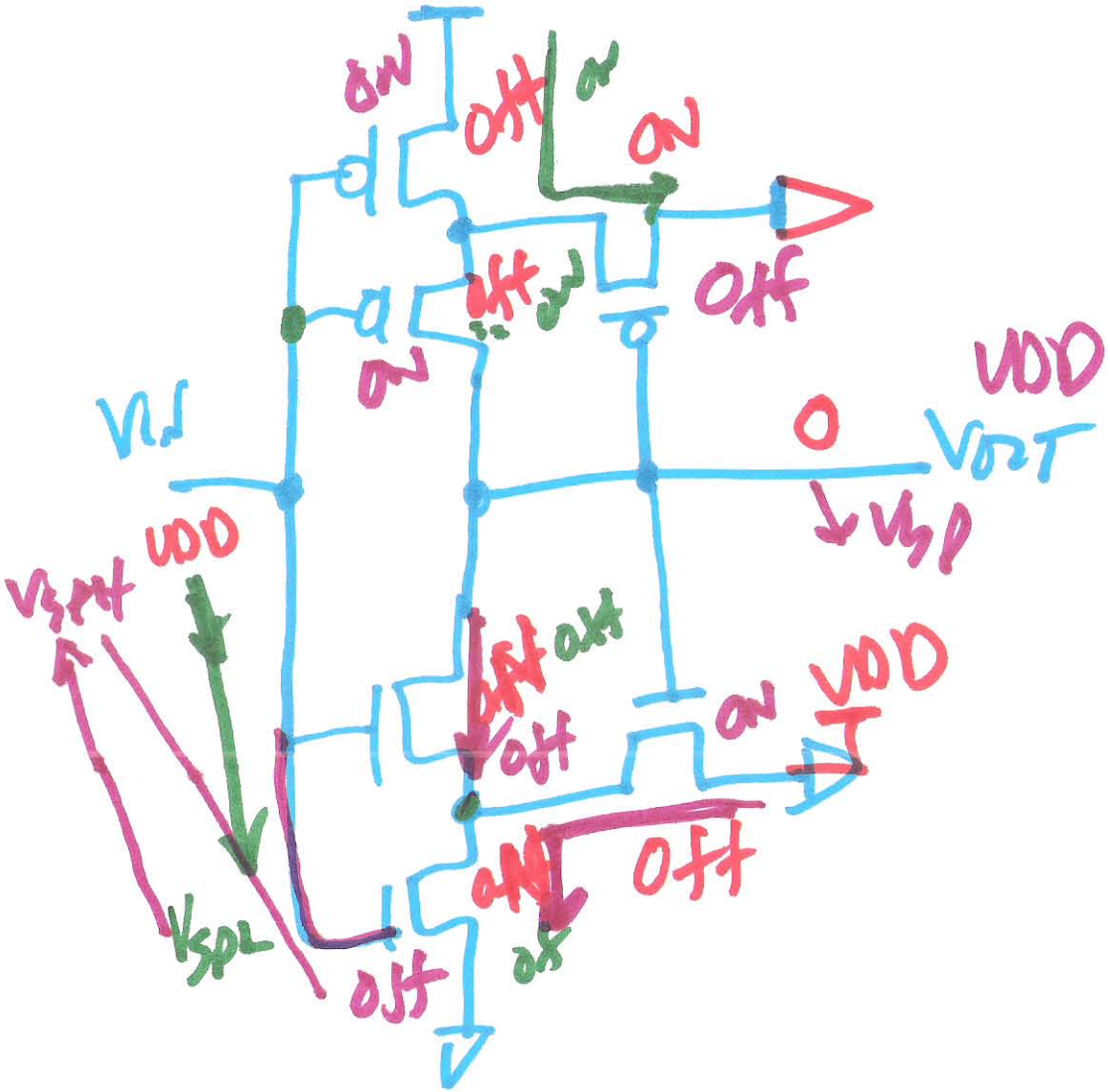
ON
OFF
ON
ON
OFF
OFF
ON
VDD
0
VOUT
VSP
VDD
VSPH
OFF
OFF
ON
VDD
OFF
OFF
VSPL
OFF

5)

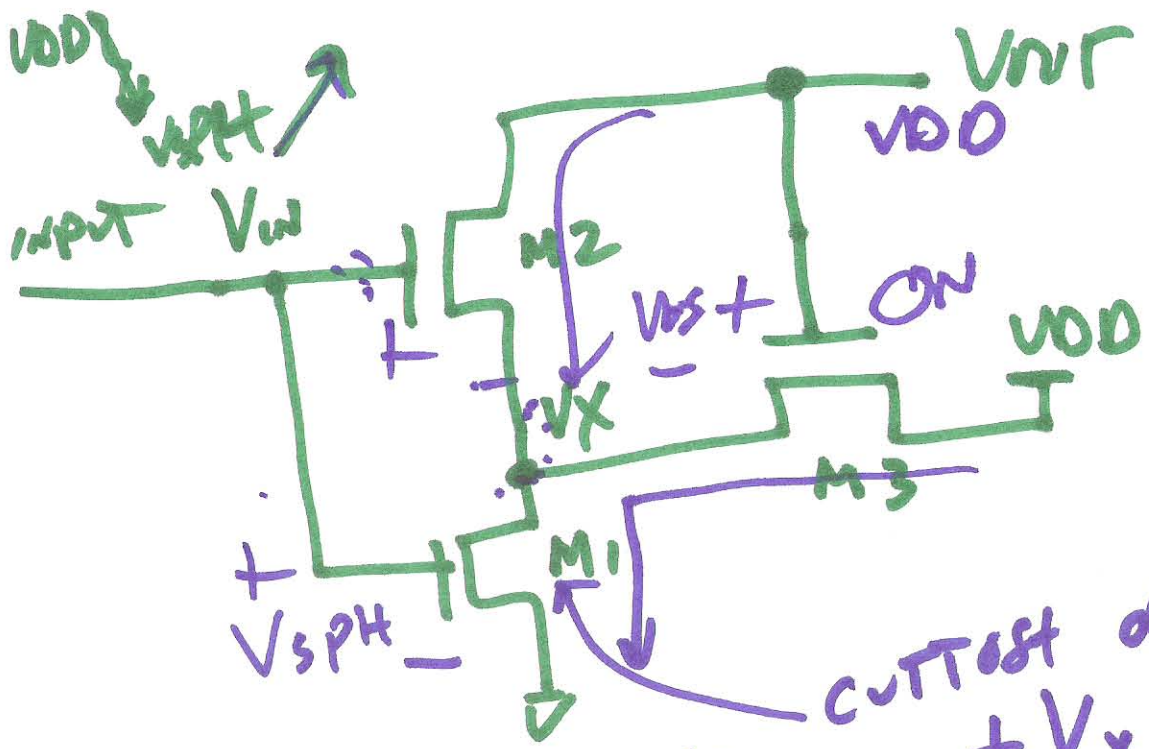

$$V_{IN} = V_{SPH} = V_{THN2} + V_X$$

$$\frac{\beta_1}{\beta_3} = \frac{W_1 L_3}{W_3 L_1}$$

$$\frac{\beta_3}{2}\Big(\underbrace{VDD - V_X}_{V_{GS3} =} - V_{THN}\Big)^2 = \frac{\beta_1}{2}\left(V_{SPH} - V_{THN}\right)^2$$

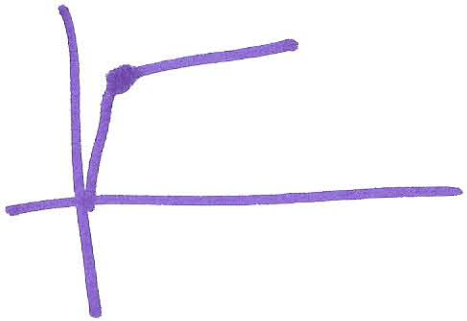

$$\boxed{\frac{VDD - V_{SPH}}{V_{SPH} - V_{THN}}}$$

b)

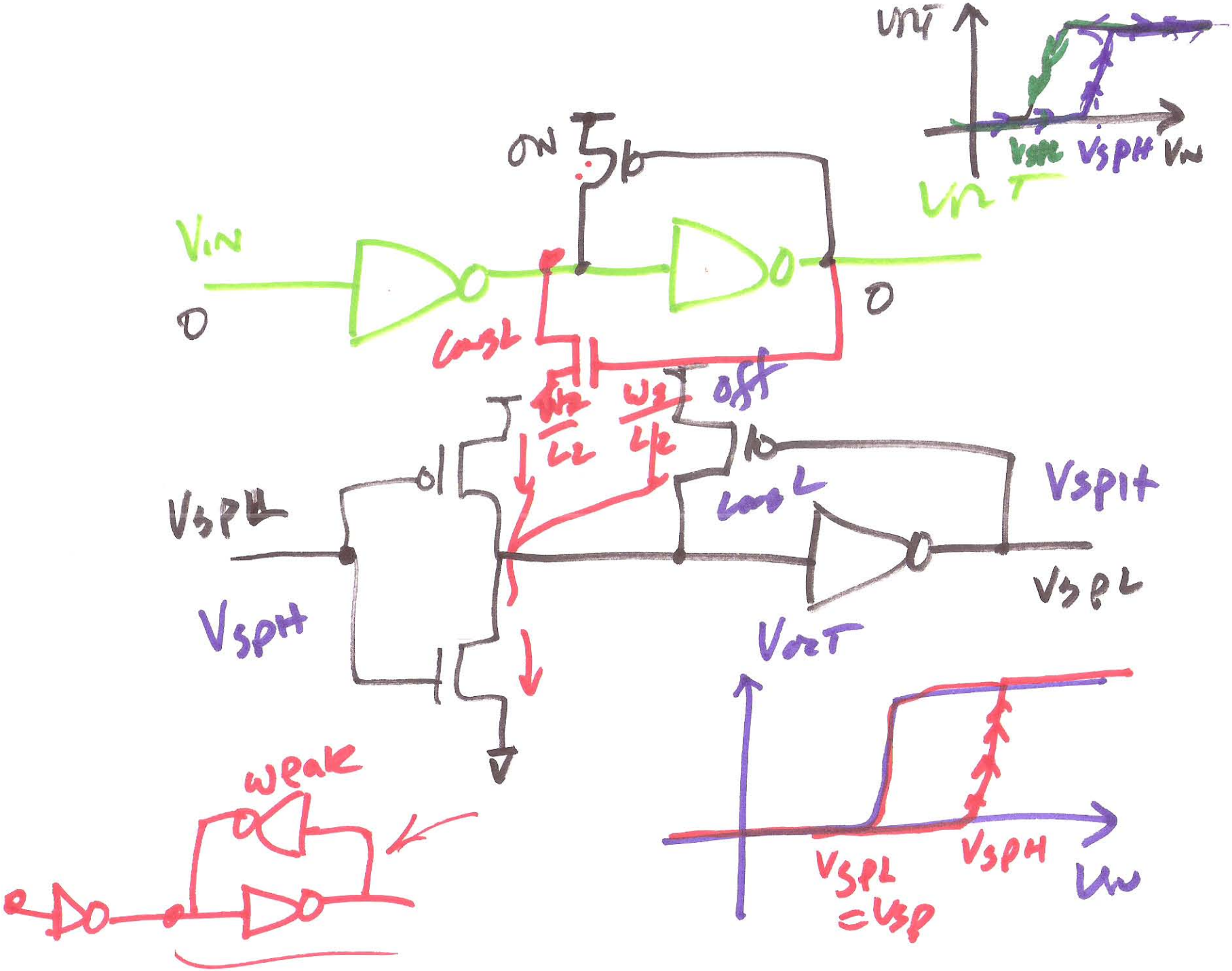
VOUT
VSPL
VSPH
VIN
VIN
ON
0
0
CMOS
OFF
W2/L2
W2/L2
VSPH
VSPL
CMOS
VSPH
VSPL
VOUT
VSPL
VSPH
VIN
=VSP
weak

7)