H.W. #9 EE 420/ECG 620 Spring 2020

Show your work for credit and put a box around each of your answers (follow the hw guidelines!) Unless otherwise indicated use the book's long-channel (1 um) process.

1. Hand calculate the DC currents and voltages in the following circuit. Compare your hand calculated values to LTspice simulations and comment. (4 points)

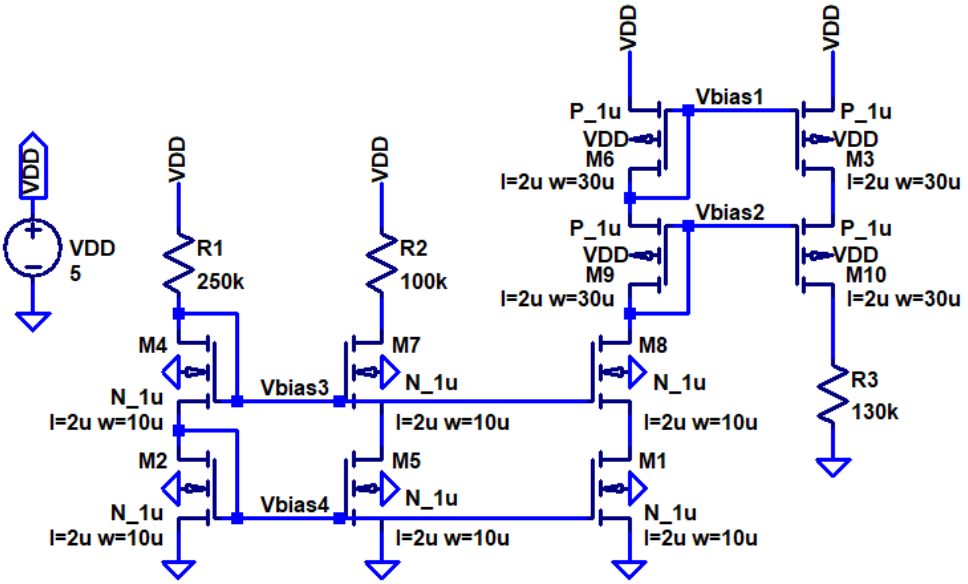

2. If R2, in the circuit used in problem 1, is replaced with a 10 mV sinusoid at 1 kHz, estimate the resulting sinusoidal drain current in M5/M7. Verify your hand calculated answer using transient simulations. (1 point)
3. Repeat problem 2 if R3 is replace with a 10 mV sinusoid at 1 kHz. (1 point)