H.W. #10 EE 420/ECG 620 Spring 2020

Show your work for credit and put a box around each of your answers (follow the hw guidelines!) Unless otherwise indicated use the book's long-channel (1 um) process.

1. Work book problems 20.8 and 20.9. (4 points)
2. Hand calculate the DC currents and voltages in the following circuit. Compare your hand calculated values to LTspice simulations and comment. (4 points)

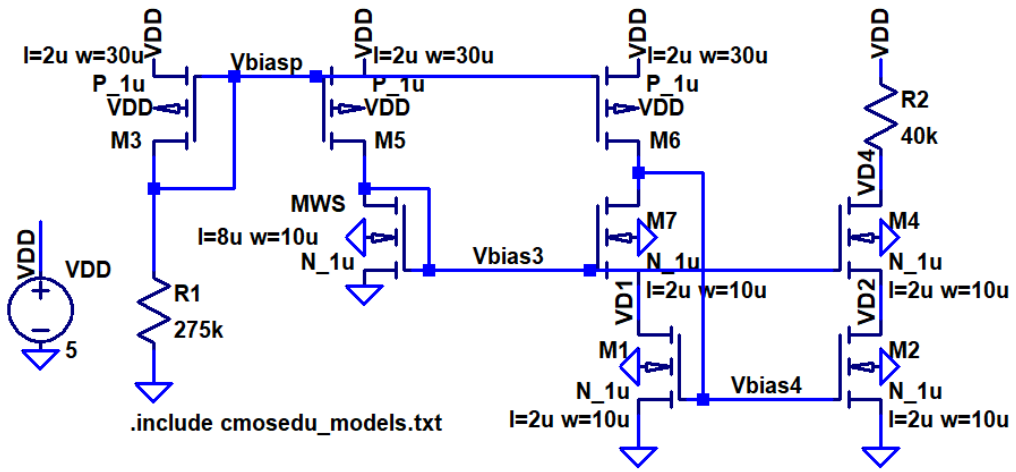

3. If R2, in the circuit used in problem 2, is replaced with a 10 mV sinusoid at 1 kHz, estimate the resulting sinusoidal drain current in M4/M2. Verify your hand calculated answer using transient simulations. (1 point)
4. Suppose an AC signal (say, 10 mV at 1 kHz) is injected through a large capacitor to the gates of M1 and M2 in the circuit of problem 2. Estimate the AC voltage on VD4. Note that the AC voltage on Vbias4 is 10 mV at 1 kHz. Verify your answer with LTspice. (2 points)